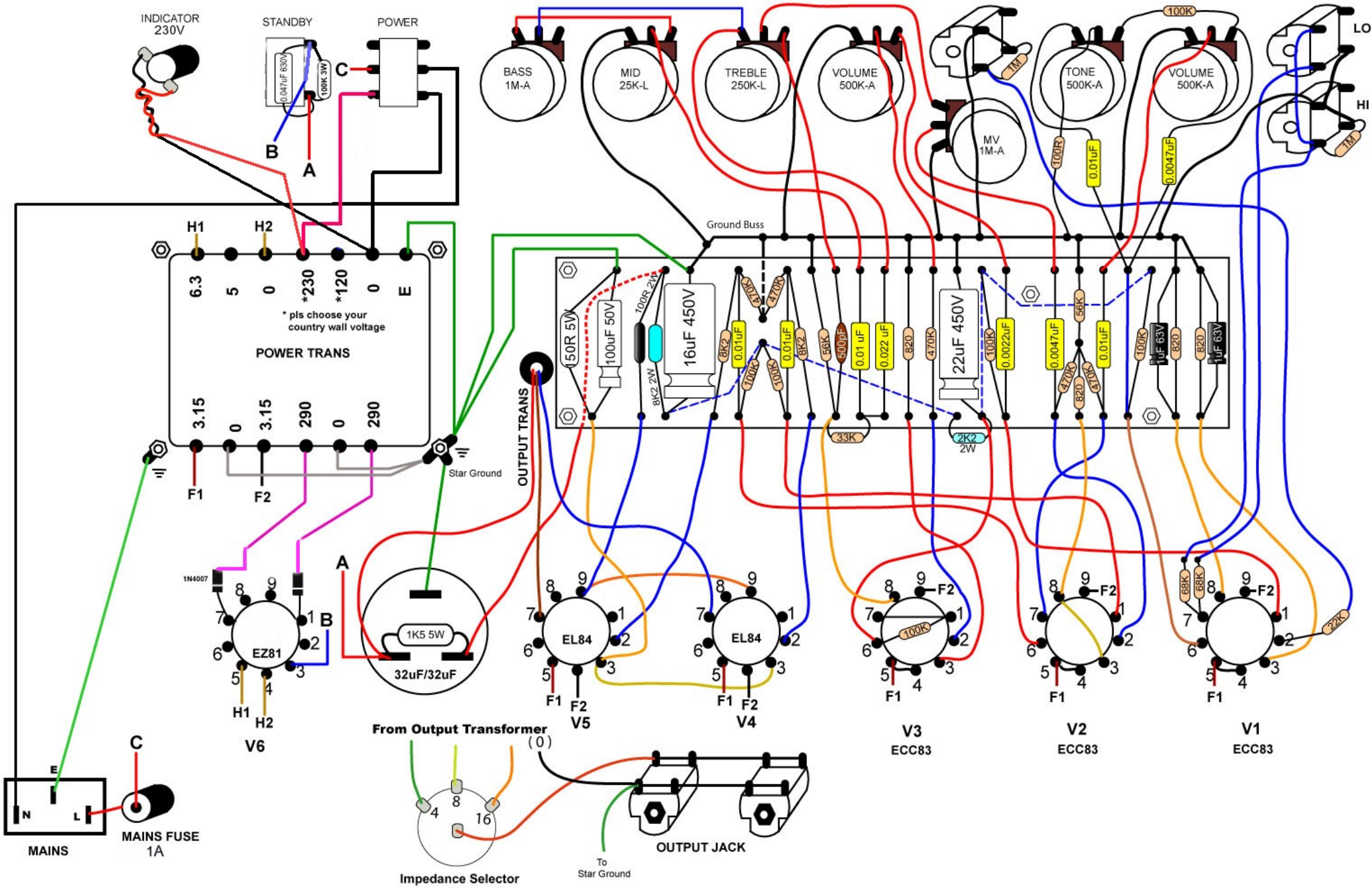18 WATT TMB LAYOUT